REVISIONS				
ZONE	REV	DESCRIPTION	DATE	APPROVED
All	A	Initial Release	12/5/17	OP

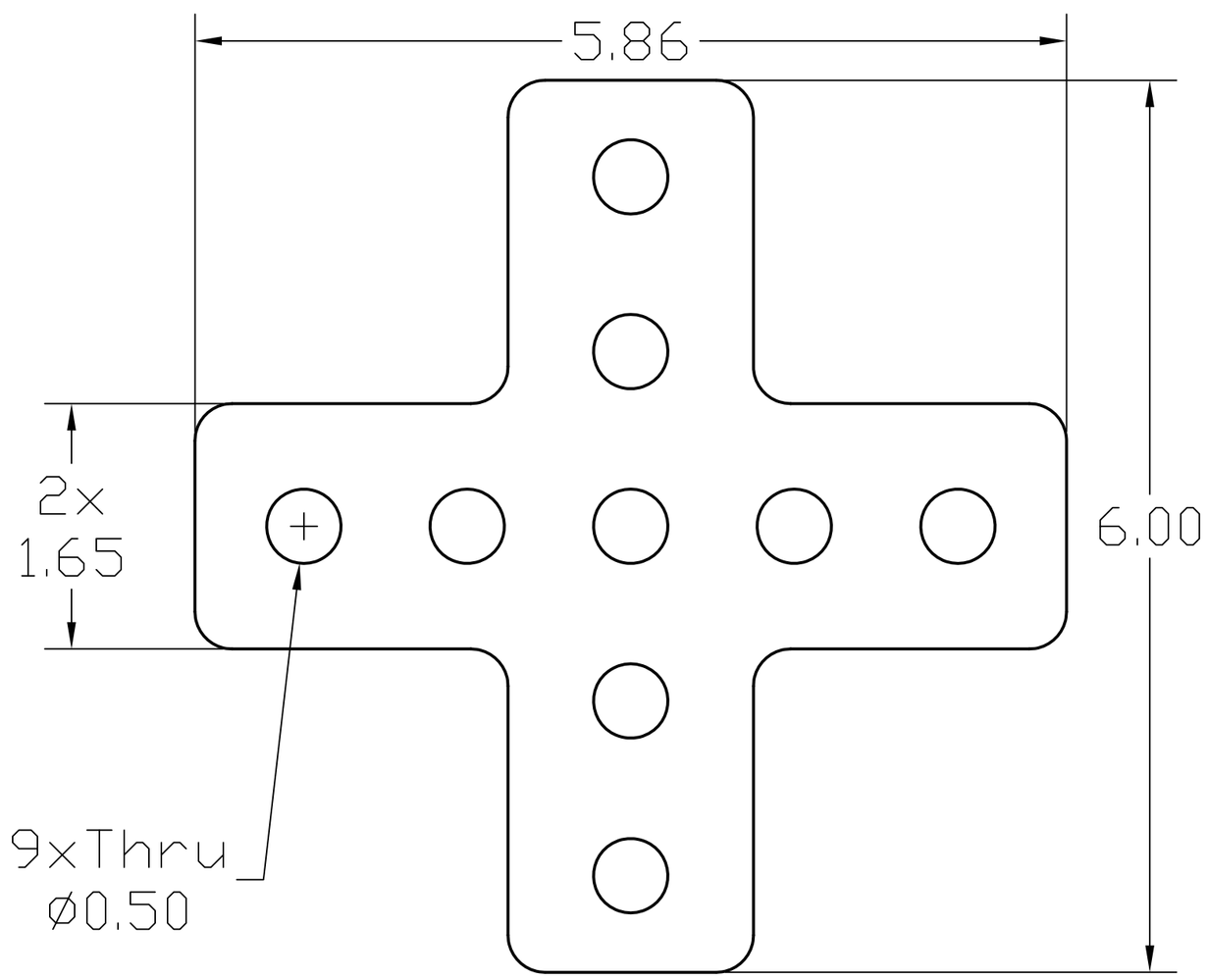

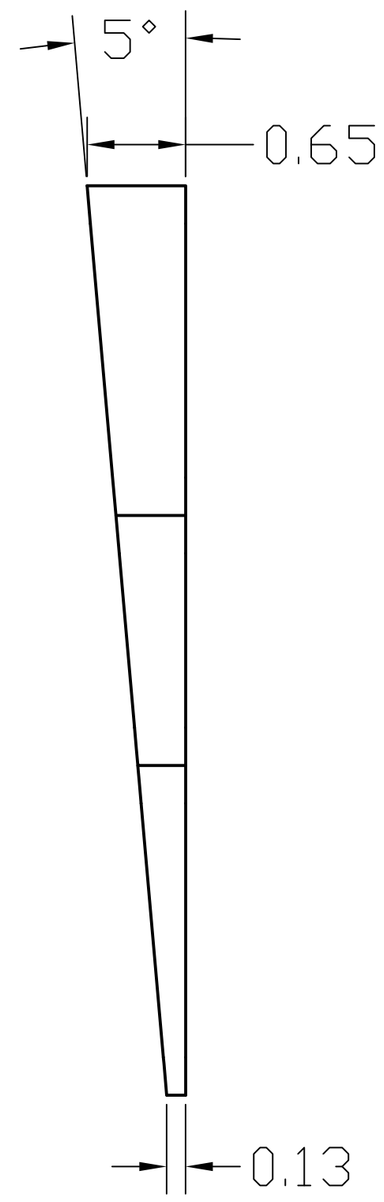

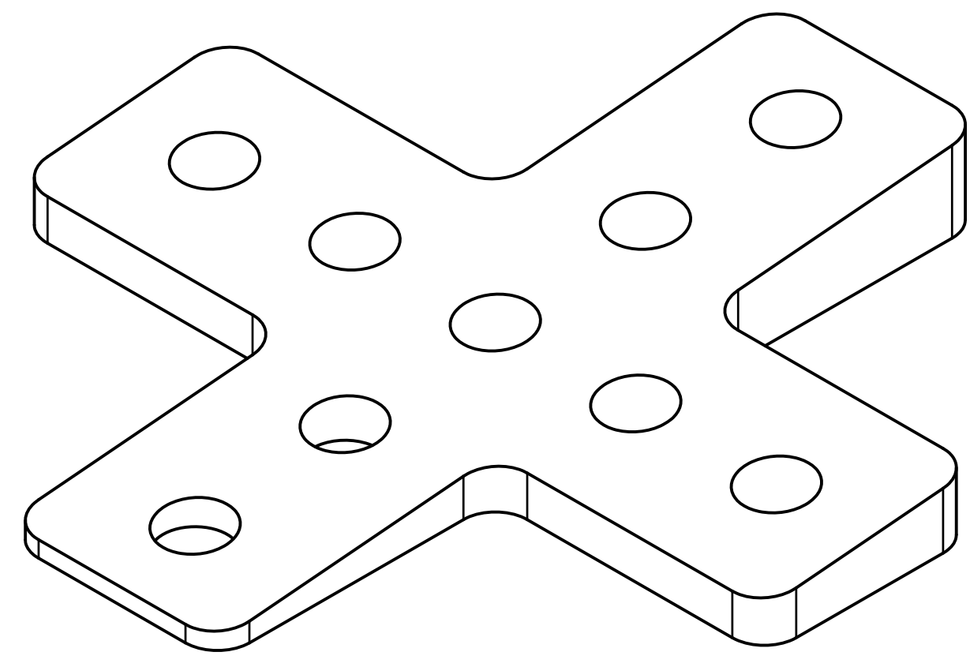

GREEN LINK
ECO-ENGINEERING

FILE NAME SolarWedge	5519 E Cork Street Kalamazoo Michigan 49048 USA (269)743-3368 (888) 672-9897
CONTRACT NO KnuckleHeads	
DRAWN 11/8/2017	SolarWedge 5 degree
CHECK OP	
APPR. op	
ISSUED 9/29/2017	
Urethane	

SIZE	FSCM NO	DWG NO	REV
	–	A-2020-1-Wedge [A] Solar KnuckleHead 5 degree Wedge	A
SCALE 1:1		WEIGHT 135 grams	SHEET 12